NOTES:

1. DIMENSIONS AND TOLERANCES PER ANSI Y14.5-1982.
2. MATERIAL: AL. ALLOY 6063 T5
3. REMOVE ALL SHARP EDGES AND BURNS.

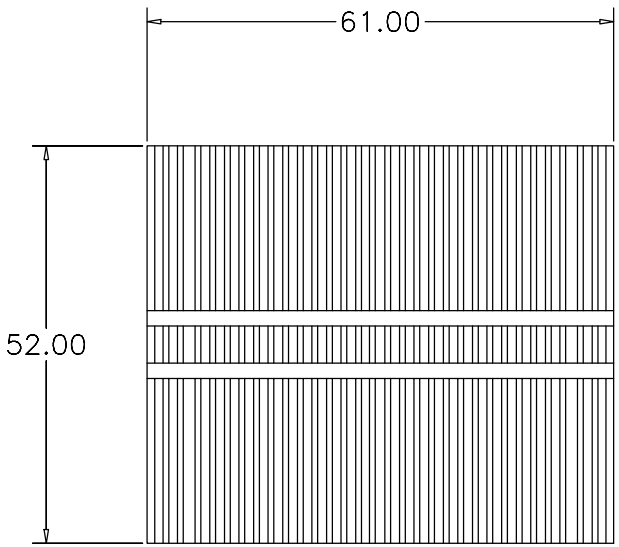

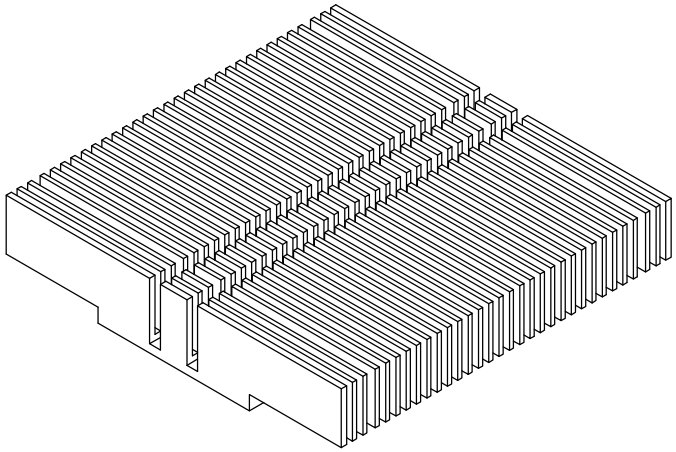

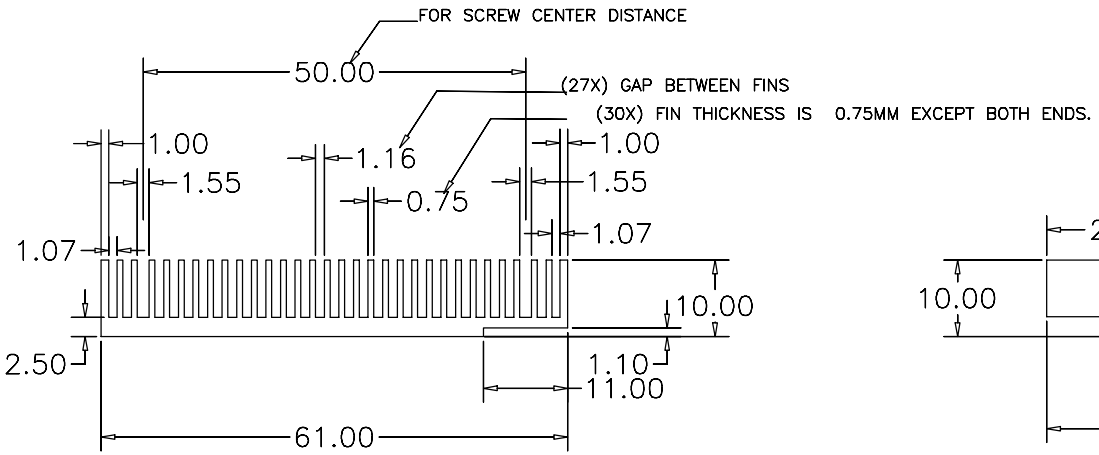

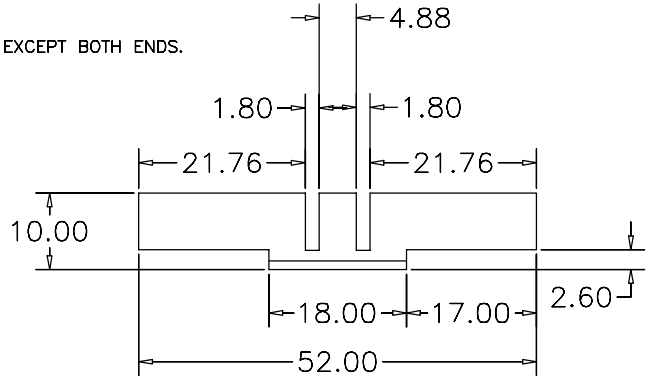

DO NOT SCALE DRAWING	DRAWING NUMBER: HEATSINK LP652	COFAN 43144 CHRISTY ST FREMONT CA 94583	
UNLESS OTHERWISE SPECIFIED DIMENSIONS ARE IN INCHES TOLERANCES ARE:	MATERIAL: AL ALLOY 6063 T5	HEATSINK	
1 PLACE .X ± .03	FINISH:		
2 PLACE .XX ± .01	DRAWN BY: S.K	PART NUMBER:	REV: A
3 PLACE .XXX ± .005			
ANGLES EXCEPT 90° ± 1°	ENGINEER: S.K	SHEET: 1 OF 1	DATE DRAWN: 12-03-2001 / SCALE: 1=1
MAXIMUM SURFACE ROUGHNESS 125 √			